USER MANUAL

Professional Cord/Cordless Lithium Hair Clipper

Model: RN-CT-002-SGL-B

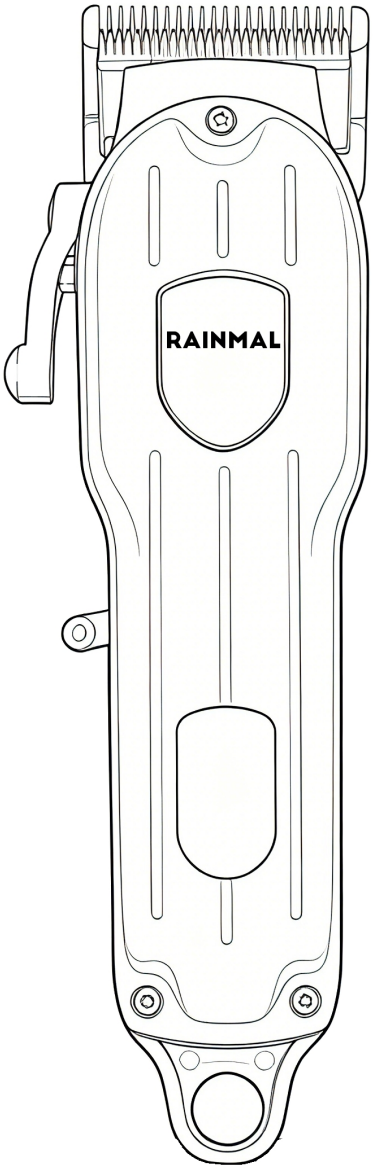

English edition

WHAT'S INCLUDED

Clipper and accessories

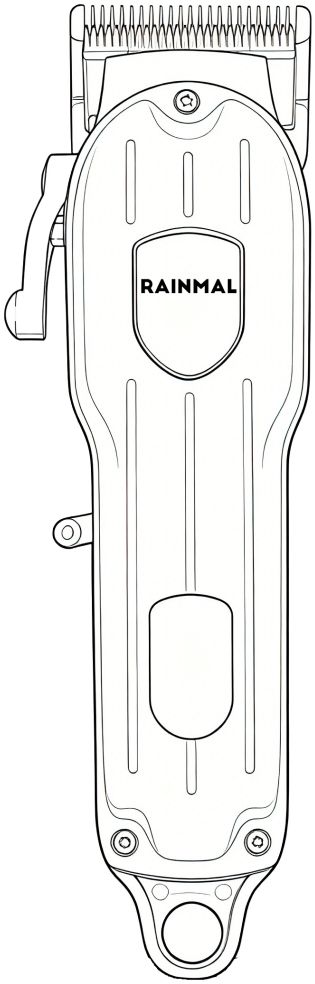

Clipper

Fine-toothed comb

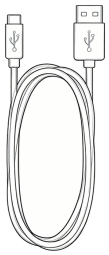

USB power cable

Blade protection cap

Lubricating oil

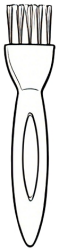

Cleaning brush

Attachment guards

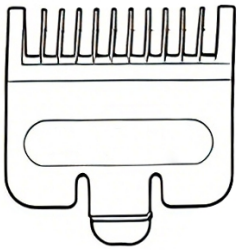

1.5 mm / 1/16 in

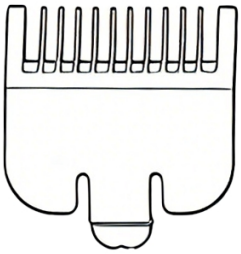

3 mm / 1/8 in

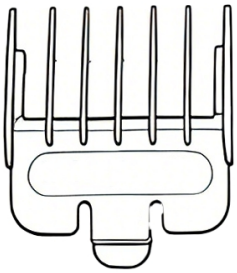

4.5 mm / 3/16 in

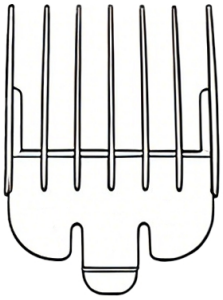

6 mm / 1/4 in

IMPORTANT SAFETY INSTRUCTIONS

Danger

An appliance connected to a power source may remain electrically live even when switched off. To reduce the risk of death or injury from electric shock:

1. Always unplug the appliance from the electrical outlet immediately after use, except when charging.

2. Do not place or store the appliance where it could fall or be pulled into a bathtub or sink.

3. Do not use the appliance while bathing or in the shower.

4. Do not place the appliance in water or other liquids, or allow it to fall into them.

5. If the appliance falls into water, do not reach for it. Unplug it immediately.

6. Unplug the appliance before cleaning.

Warning

To reduce the risk of burns, electric shock, fire, or injury:

1. Never leave a plugged-in appliance unattended.

2. This appliance is not intended for use by persons (including children) with reduced physical, sensory or mental capabilities, or a lack of experience and knowledge, unless they are supervised or instructed in its use by a person responsible for their safety. Supervise children to ensure they do not play with the appliance.

3. Use the appliance only for its intended purpose as described in this manual. Use only attachments recommended by the manufacturer. Do not use an extension cord to operate the appliance.

4. Never operate the appliance if its cord or plug is damaged, if it is not working properly, or if it has been dropped, damaged, or immersed in water.

5. Keep the cord away from heated surfaces.

6. Do not pull or twist the cord, or wrap it around the appliance.

7. Never drop or insert any object into an opening on the appliance.

8. Do not place the appliance on any surface while it is operating.

9. Do not use the appliance with a damaged or broken comb, or with missing blade teeth, as injury may result. Before each use, ensure the blades are properly aligned and oiled.

IMPORTANT SAFETY INSTRUCTIONS

Warning (continued)

10. Do not use the appliance outdoors, where aerosol (spray) products are being used, or where oxygen is being administered.

11. Do not crush the appliance, heat it above 212°F (100°C), or incinerate it, as this may cause fire, explosion, or burns.

12. Always connect the cord to the appliance first, then to the outlet. To disconnect, switch off all controls, then remove the plug from the outlet.

13. Keep lubricating oil away from children and pets.

14. Never operate the appliance with blocked air openings or on a soft surface, such as a bed or couch, where the air openings may become blocked. Keep air openings free of lint, hair, and similar debris.

15. To recharge the battery, use only the supplied cord or a USB-C cord.

16. Use only a certified USB power source, such as a computer, USB outlet, USB-equipped lamp, Class 2 power supply, or automotive adapter.

BEFORE USE & TROUBLESHOOTING

Before first use

Charge the clipper for 3 hours before first use to activate the built-in rechargeable batteries.

Motor runs, but the blade does not move or sticks

Clean and oil the blade set.

Clipper does not start

Gently tap the device once. You can tap it gently against your thigh or a soft cotton cloth.

Clipper pulls hair

The blades may be dirty or dry. Clean and oil the blades.

HOW TO USE

Getting started

The first time you cut hair, remove only a small amount until you become familiar with the hair length each attachment guard provides.

• For best results, hair should be dry before using the clipper.

• Thoroughly comb the hair with the included comb.

• Move the clipper through the hair at a slow, even speed. Do not force it through the hair.

• Cut against the direction of hair growth so the guard can pick up more hair.

• Oil the blades on your new clipper every few haircuts.

USING ATTACHMENT GUARDS

Adding guards

Switch off the clipper before attaching a guard.

1. Hold the guard at a slight angle and place it onto the clipper so the blade tips fit into the slots between the guard teeth.

2. With your thumb, press down on the guard at the size marking until it snaps into place.

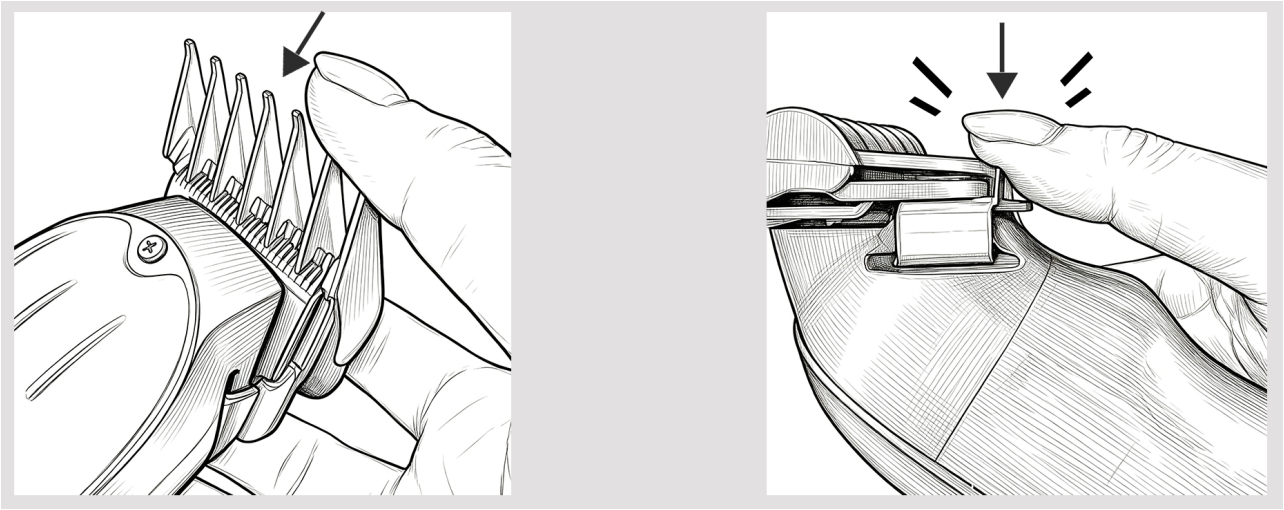

Removing guards

Switch off the clipper before removing a guard. Hold the top of the guard and place your thumb under its tab. Push up on the tab to remove the guard from the clipper.

USING THE TAPER LEVER

Blending different hair lengths

The taper lever allows you to gradually adjust the cutting length and blend between different hair lengths.

Up position: closest cut.
Down position: longest cut.

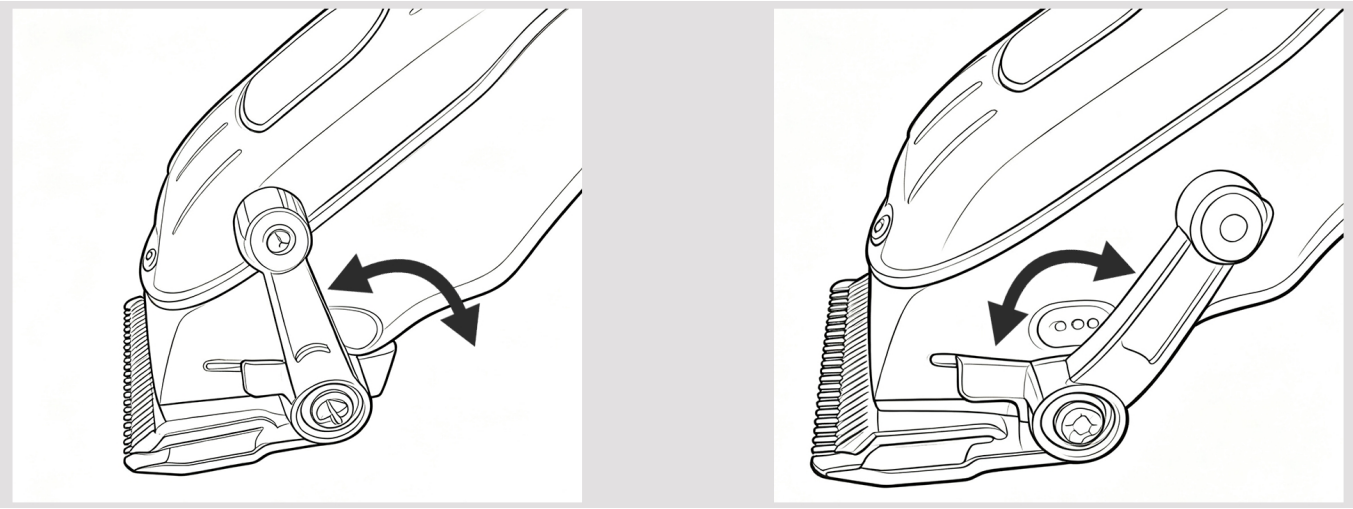

Tip: clearing trapped hair

Hair buildup can slow down the clipper. With the clipper running, move the taper lever back and forth quickly several times to help clear trapped hair. Doing this regularly, especially after cutting a lot of hair, helps keep the blades free of hair clippings.

Oil the blades after this procedure.

CLIPPER CARE

Step 1: remove hair clippings

Use the cleaning brush to remove hair clippings from the blades.

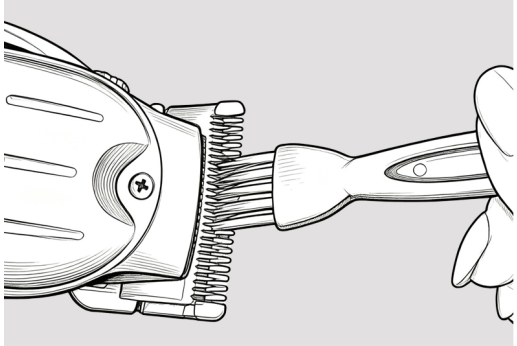

Step 2: wipe the exterior

Wipe the exterior with a soft, damp cloth.

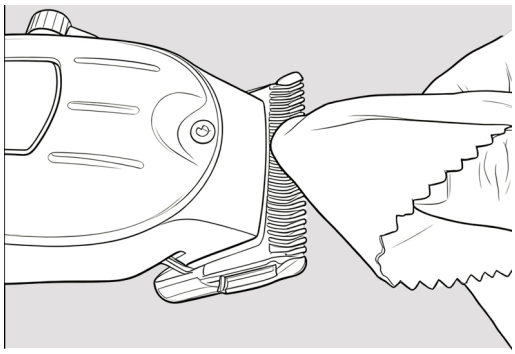

Step 3: oil the blades

Apply a few drops of oil between the fixed comb blade and the moving cutter blade. See KEEP IT RUNNING LIKE NEW! on the next page.

Very important

Clean and oil the blades regularly to keep them working properly.

KEEP IT RUNNING LIKE NEW!

Oiling the blades

Always apply oil to the blades before and after use to maintain cutting performance.

For best results, apply three drops to the front of the blades and one drop to each side, as shown.

Wipe off excess oil with a soft, dry cloth.

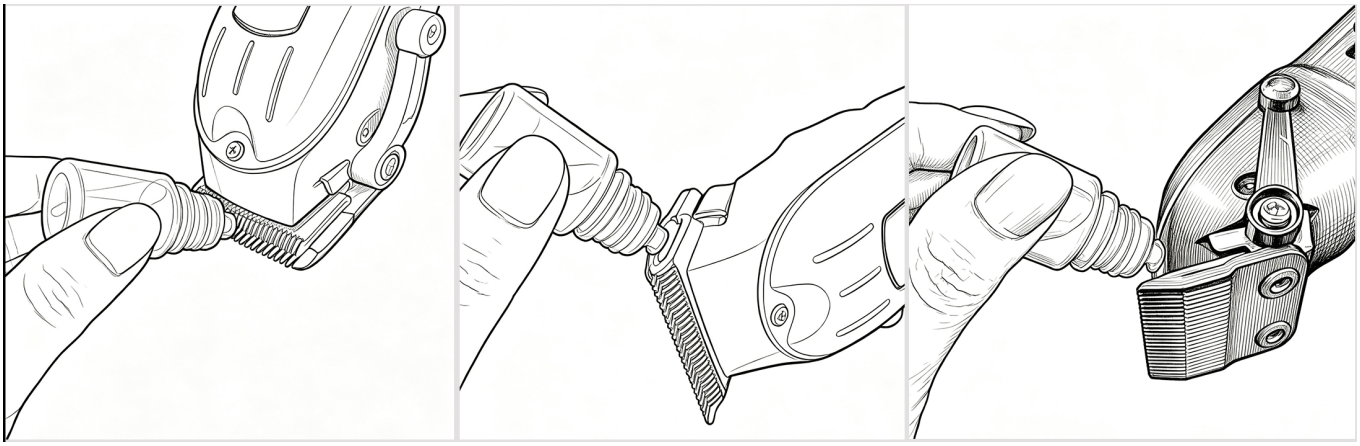

Tip: choosing oil

Use only the RAINMAL Clipper Oil included in the pack. Do not use hair oil, grease, or oil mixed with kerosene or any solvent.